REQUIRED CONTAMINATION CLASS	ISO 4406 class 20/18/15
OPERATING TEMPERATURE RANGE	-20° to +90°C

INLET	DIRECTION
A	RIGHT
B	LEFT

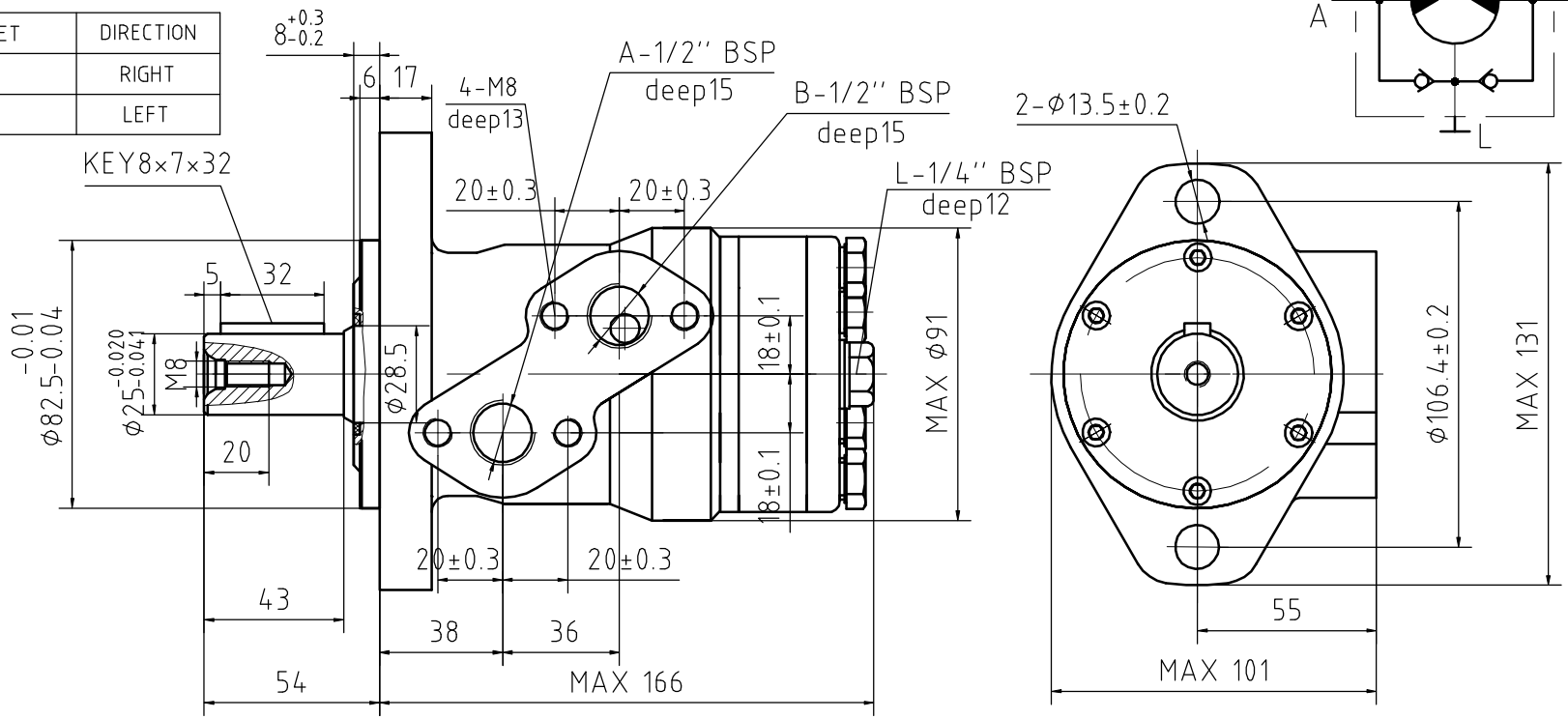

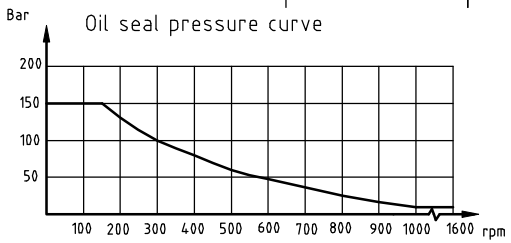

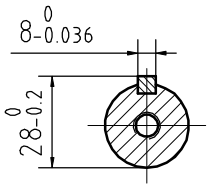

PRESSURE(bar)		
CONTINUOUS	INTERMITTENT	PEAK
120	140	200

Type:Geroller

Max allowed back-pressure or drain pressure: 115bar
Max allowed torque :369Nm
Max speed: 245rpm

PAINTING COLOUR:BLACK
PAINTING THICKNESS RANGE: 0.04mm-0.06mm
SHAFT AND FRONT HOUSING: MAGNESIUM PHOSPHATED

forward products	Date 06.03.2019
Nom.Displacement 250cc/rmp	
FP-MP250-2H-CY25-01	